Agilent 7800/7900 ICP-MS

Site Preparation Checklist

Agilent Technologies

Notices

No part of this manual may be reproduced in any form or by any means (including electronic storage and retrieval or translation into a foreign language) without prior agreement and written consent from Agilent Technologies, Inc. as governed by United States and international copyright laws.

Manual Part Number

G8400-90020

Edition

Rev. B, June 2015
Agilent Technologies

9-1 Takakura-cho, Hachioji-shi,
Tokyo 192-8510 Japan

© Agilent Technologies, Inc. 2015

Warranty

The material contained in this document is provided "as is," and is subject to being changed, without notice, in future editions. Further, to the maximum extent permitted by applicable law, Agilent disclaims all warranties, either express or implied, with regard to this manual and any information contained herein, including but not limited to the implied warranties of merchantability and fitness for a particular purpose. Agilent shall not be liable for errors or for incidental or consequential damages in connection with the furnishing, use, or performance of this document or of any information contained herein. Should Agilent and the user have a separate written agreement with warranty terms covering the material in this document that conflict with these terms, the warranty terms in the separate agreement shall control.

Technology Licenses

The hardware and/or software described in this document are furnished under a license and may be used or copied only in accordance with the terms of such license.

Restricted Rights Legend

If software is for use in the performance of a U.S. Government prime contract or subcontract, Software is delivered and licensed as "Commercial computer software" as defined in DFAR 252.227-7014 (June 1995), or as a "commercial item" as defined in FAR 2.101(a) or as "Restricted computer software" as defined in FAR 52.227-19 (June 1987) or any equivalent agency regulation or contract clause. Use, duplication or disclosure of Software is subject to Agilent Technologies' standard commercial license terms, and non-DOD Departments and Agencies of the U.S. Government will receive no greater than Restricted Rights as defined in FAR 52.227-19(c)(1-2) (June 1987). U.S. Government users will receive no greater than Limited Rights as defined in FAR 52.227-14 (June 1987) or DFAR 252.227-7015 (b)(2) (November 1995), as applicable in any technical data.

Safety Notices

WARNING

A WARNING notice denotes a hazard. It calls attention to an operating procedure, practice, or the like that, if not correctly performed or adhered to, could result in personal injury or death. Do not proceed beyond a WARNING notice until the indicated conditions are fully understood and met.

CAUTION

A **CAUTION** notice denotes a hazard. It calls attention to an operating procedure, practice, or the like that, if not correctly performed or adhered to, could result in damage to the product or loss of important data. Do not proceed beyond a **CAUTION** notice until the indicated conditions are fully understood and met.

NOTE

A NOTE contains helpful information on the usage - it does not denote a hazard.

Contents

Checklist and Requirement Summary 5
Customer Responsibilities 5
Important Customer Information 6
Space, Weight and Access Requirements 7
Environmental Conditions and Site Requirements 10
Power Consumption and Configuration 12
Cooling Water Requirements 14
Gas Requirements 15
Essential Requirements for Cell Gas Installation 16
Communications 17
Laboratory Supply Requirements 18
Other Requirements 19
Important Customer Web Links 20
Appendix 21
Detailed Environmental Conditions and Site Requirements 21
Detailed Power Consumption and Configuration 23
Detailed Cooling Water Requirements and Operating Supplies 28
Detailed Gas Requirements 29

This page is intentionally left blank.

Checklist and Requirement Summary

Thank you for purchasing an Agilent ***instrument***. To get you started and to assure a successful and timely installation, please refer to this specification or set of requirements.

Correct site preparation is the first key step in ensuring that your instruments and software systems operate reliably over an extended lifetime. This document is an ***information guide AND checklist*** prepared for you that outlines the supplies, consumables, space and utility requirements for your equipment for your site.

Customer Responsibilities

Make sure your site meets the following prior specifications before the installation date. This checklist includes information on these product G8421A and G8403A. For details, see specific sections within this checklist, including:

- ☐ The necessary laboratory or bench space is available. Refer to "Space, Weight and Access Requirements" on page 7.
- ☐ The environmental conditions for the lab as well as laboratory gases and plumbing. Refer to "Environmental Conditions and Site Requirements" on page 10.
- ☐ The power requirements related to the product (e.g., number & location of electrical outlets). Refer to "Power Consumption and Configuration" on page 12.
- ☐ The cooling water requirements for the product and installation. Refer to "Cooling Water Requirements" on page 14.
- ☐ The gas requirements for the product and installation. Refer to "Gas Requirements" on page 15.
- ☐ The required network communication configuration. Refer to "Communications" on page 17.
- ☐ The required items and tools necessary for the product and installation. Refer to "Laboratory Supply Requirements" on page 18.
- ☐ For other product specific information, refer to "Other Requirements" on page 19.
- ☐ Agilent Technologies service providers will not install your Agilent ICP-MS system until an adequate exhaust system is present and functioning. Refer to "Environmental Conditions and Site Requirements" on page 10.

If Agilent is delivering installation and familiarization services, users of the instrument should be present throughout these services; otherwise, they will miss important operational, maintenance and safety information.

Important Customer Information

1. If you have questions or problems in providing anything described as part of the Customer Responsibilities above, please contact your local Agilent or partner support/service organization for assistance prior to delivery. In addition, Agilent and/or its partners reserve the right to reschedule the installation dependent upon the readiness of your laboratory.
2. Should your site not be ready for whatever reasons, please contact Agilent as soon as possible to re-arrange any services that have been purchased.
3. Other optional services such as additional training, operational qualification (OQ) and consultation for user-specific applications may also be provided at the time of installation when ordered with the system, but should be contracted separately.

Space, Weight and Access Requirements

Identify the laboratory bench space before your system arrives based on the information in Table 2.

Pay special attention to the ***total height and total weight requirements for all system components you have ordered and avoid bench space with overhanging shelves***. Also pay special attention to the total weight of the modules you have ordered to ensure your laboratory bench can support this weight.

Special Notes

1. The Agilent 7800/7900 ICP-MS, its data system and accessories will be delivered to your site in large and small shipping containers. Note the size of the largest shipping container below.
2. The containers will be delivered in a large truck. You must furnish a forklift, or other suitable lifting device, and make arrangements to unload the truck and transport the containers to your site. All doorways, hallways, floors and elevators must be able to accommodate the largest, heaviest container as indicated in Table 1. Do not open any of the shipping containers unless a representative of Agilent Technologies is present.
3. At least 60 cm or 2 feet on all sides of the instrument must be kept clear for maintenance access.

Table 1 Shipping Container Approximate Dimensions

Instrument Description	Weight		Height		Depth		Width	
	Kg	lbs	cm	in	cm	in	cm	in
Largest shipping container	157	347	85	34	100	40	100	40

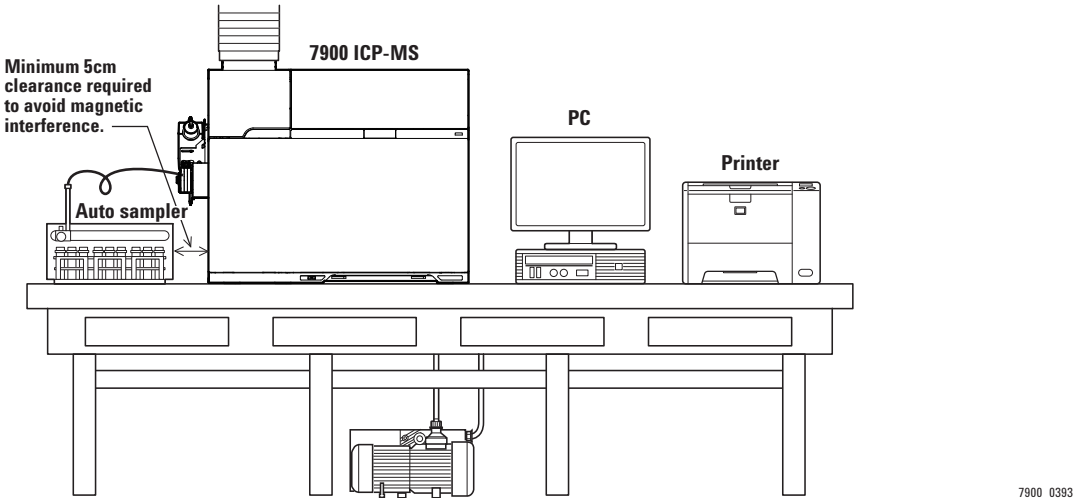

Figure 1 Layout Example (7900 ICP-MS)

Table 2 Product Dimensions

Product	Dimensions, cm (in)			Weight
	Height	Width	Depth	kg (lbs)
7800/7900 ICP-MS	59.5 (23.4) *1	73.0 (28.7)	60 (23.6)*2	100 (221)
Agilent DS402 Foreline Pump for 7800	24.2 (9.5)	16.4 (6.5)	54.1 (21.3)	35 (77)
Agilent MS40+ Foreline Pump for 7900	22.8 (9)	29.7 (11.7)	41.8 (16.5)	33 (72.7)
Data System (PC, Monitor, Printer)	Size and weight of the data system depends on the components included. Reserve at least 100 cm (39 in) of bench space for the data system. A typical data system weight is 30 kg (66 lb).			
Agilent Chiller (G3292A)	57.6 (22.7)	36.8 (14.5)	70.2 (27.6)	85 (188)
Agilent Heat Exchanger (G1879B)	57.2 (22.5)	38.0 (15.0)	51.4 (20.25)	42 (92)
Agilent Chiller for Japan (G3159A)	71.5 (28.2)	52.0 (20.5)	68.5 (27.0)	100 (220)
Agilent SPS 4 Autosampler	51.0 (20.1)	60.0 (23.6)	36.3 (14.3)	15 (33.1)
Integrated Autosampler (I-AS)	22.0 (8.7) 28.0 (11.0)*3	29.0 (11.4)	36.0 (14.2)	5 (11)
Agilent ASX-500 Series Autosampler	25.0 (9.8) 61 (24)*3	52 (20.5)	48.2 (19)	11 (24)

*1 : Maximum height is 65.5 (25.8) including the duct collar on top.

*2 : Maximum depth is 72.5 (28.5) including a power connector projecting at rear.

*3 : Height includes probe

NOTE Approximate dimensions, refer to specific product documentation.

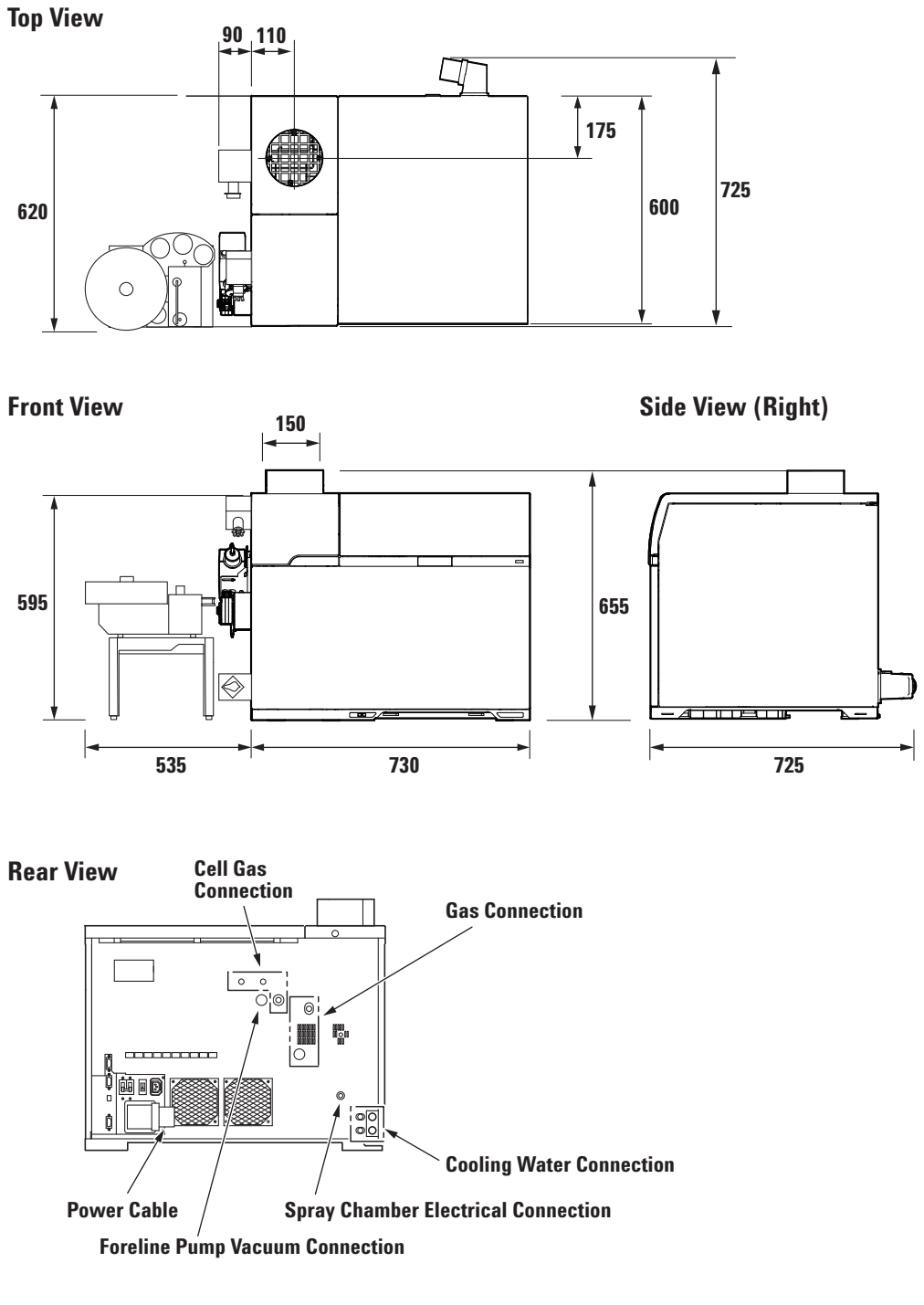

Figure 2 7800/7900 ICP-MS Dimensions (unit: mm)

Environmental Conditions and Site Requirements

Operating your instrument within the recommended temperature ranges insures optimum instrument performance and lifetime.

Special Notes

1 Performance can be affected by sources of heat and cold (e.g., direct sunlight, heating/cooling from air conditioning outlets, drafts and/or vibrations). The site's ambient temperature conditions must be stable for optimum performance.

2 The customer is responsible for supplying the ductwork between the instrument and the lab extraction system.

WARNING **User safety requires that the exhaust gases from the plasma and vacuum systems be vented externally to the building and not recirculated by the environmental control system. Health hazards include chemical toxicity of solvents, samples, and foreline pump fluid vapor.**

Table 3 Temperature and Humidity Specifications

Parameter	Specification
Temperature	15-30°C (59-86°F) < 2°C/h change and total change should be < 5°C
Humidity	20-80%
Altitude	Up to 2,000m
Atmosphere	Non Condensing; Non Corrosive

Table 4 Heat Output

Product		Heat Dissipated (W)	Heat Absorbed (W)
7800/7900 ICP-MS		2,900	
Foreline Pump		500	
PC/Monitor		430	
Heat Exchanger (50/60Hz)		2,000 (Maximum)	1,600 (2,000 maximum)
Agilent Chiller (G3292A)	50/60Hz	3,200 (Maximum)	1,600 (2,000 maximum)
Extraction Vent			1,600 (2,500 maximum)

NOTE A maximum of 4,500W is removed from the ICP-MS mainframe via the cooling water and extraction duct. Approximate values. Refer to the specific product information for details.

The ambient temperature around the heat exchanger must not exceed 30°C for normal ICP-MS operation.

Table 5 Exhaust Venting Requirements

Product	Port Diameter (mm)	Exhaust Flow	
7800/7900 ICP-MS *1	150	m^3/min	m/s
		>5	>4.7
		<7	<6.6
SPS 4 Cover Kit	Port for ducting with 50 mm ID	m^3/min	m/s
		0.05–0.10	0.43–0.85 *2

*1 Exhaust flow must be continuous as long as the plasma is ON.
Exhaust flow must be stable: maximum fluctuation of ±5% of target flow.

*2 When used with samples, standards or rinse solution(s) that release corrosive fumes in any concentration. Whenever such liquids are present, the atmospheric contents of the sampler cover must be extracted continuously at a rate of 50–100 liters per minute (0.05–0.10 m^3/min). Corrosive samples and standards should be removed from the autosampler once analysis is completed.

NOTE

Flexible ducting must be used for easy removal during instrument maintenance.
The back pressure of the ICP-MS is approximately 40Pa.

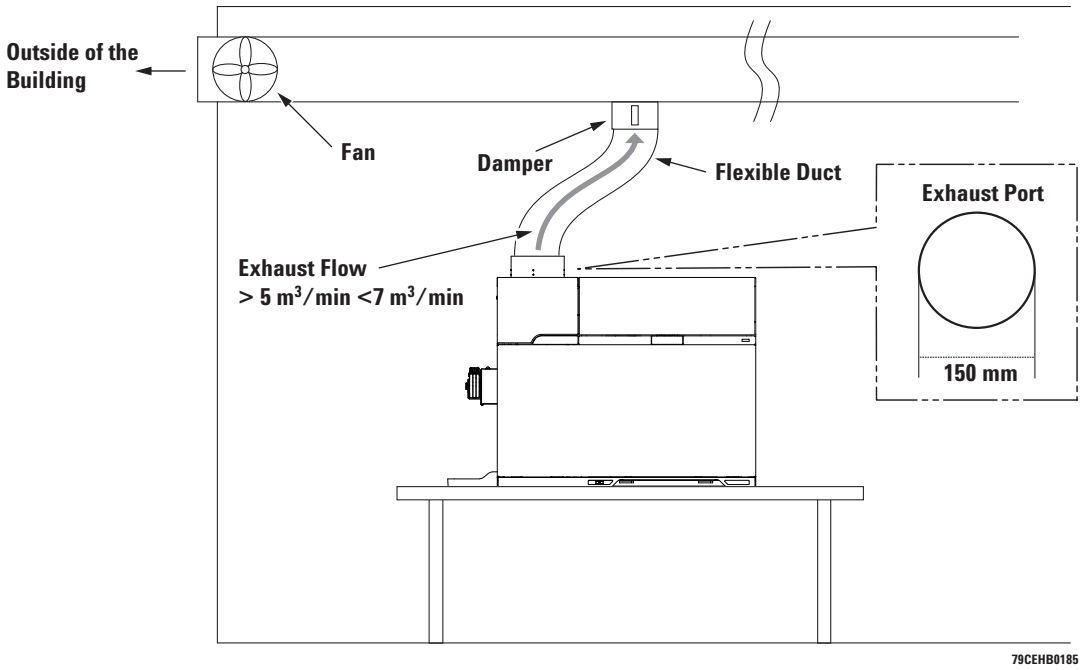

Figure 3 Exhaust Duct Connection

For more information, refer to "Detailed Environmental Conditions and Site Requirements" on page 21.

Power Consumption and Configuration

Special Notes

1 Power for the 7800/7900 ICP-MS is supplied in single-phase, Split phase, 3 phase star 4 wired, High-leg delta or 208 Wye configuration (see Table 12).

2 If a computer system is supplied with your instrument, be sure to account for those electrical outlets.

3 The entire ICP-MS system should share an isolated, noise-free electrical ground. This system ground should be electrically separate from the ground for the rest of the building, i.e. back to the main ground of the facility. (See Figure 4)

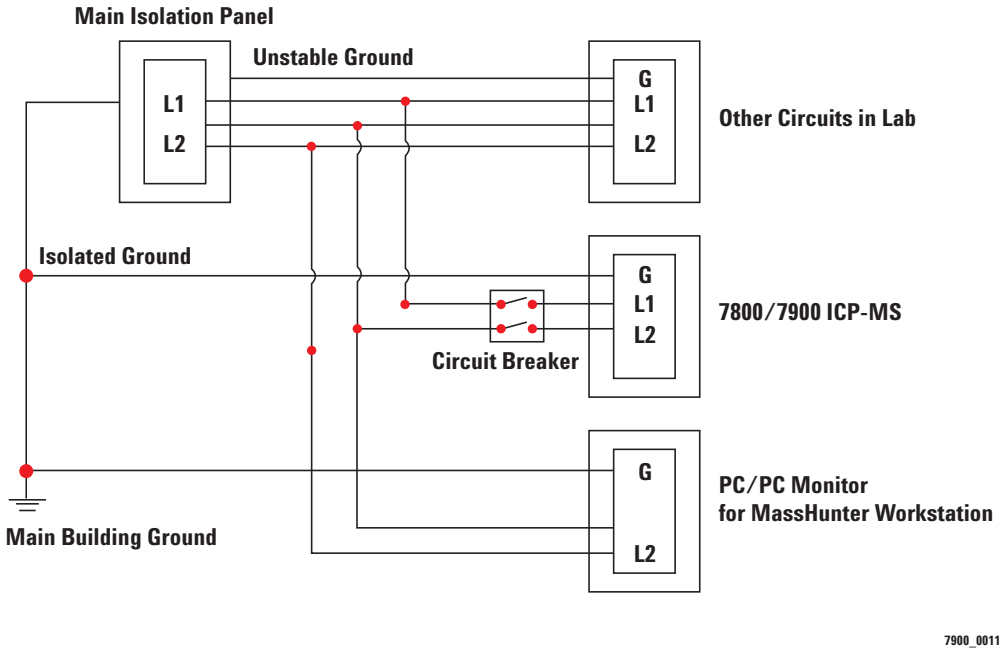

Figure 4 Isolated Ground

WARNING **Do not use extension cords with Agilent Technologies equipment. They cannot provide enough power to the system and can be a safety hazard. If the desired location of equipment does not permit its standard power cord to reach an power receptacle, your electrician should install additional outlets. Otherwise, you should relocate the equipment closer to existing power receptacles.**

Table 6 Power Requirements

Instrument Description	Line Voltage & Frequency (V, Hz)	Current Rating (amps)	Maximum Power Consumption (W)
7800/7900 ICP-MS	200 - 240Vac, 50/60Hz	24	
PC/Monitor/Printer	100-127Vac 200-240Vac	15 8	
Agilent Chiller (G3292A)*1	208-230Vac, 60Hz 240Vac, 50Hz	12.2 12.2	2900 2900
Agilent Chiller (G3159A)*2	200Vac, 50/60Hz	20	
Agilent Heat Exchanger (G1879B)*3	200-240Vac, 50Hz 100-120Vac, 50/60Hz	2.75 5.5	
SPS 4 Autosampler	100-240 V, 47/63 Hz, 1.5 A input *4	0.55	55
Integrated Autosampler (I-AS)	100-120Vac, 50/60Hz 200-240Vac, 50/60Hz	1 0.5	
ASX-500 Series Autosampler	85-264Vac	<1	40

*1: The chiller will ship with the power cable for the country of installation.
*2: The chiller will ship with the power cable for Japan.
*3: The heat exchanger will ship with the power cable for the country of installation.
*4: This is the input rating for the AC adapter. AC adapter output/autosampler input: 24 VDC, 2.5 A

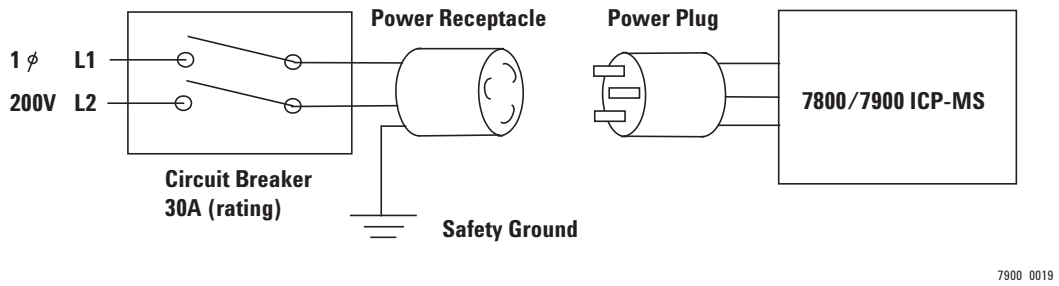

Figure 5 Main Supply - Instruments Connection without Neutral

Table 7 Power Plugs and Cords

Country	Supplied Plug	Prepared Outlet
U.S., all Americas (North, Central and South American countries), Japan, Korea and Taiwan	NEMA L6- 30P with 4.3 m power cord	NEMA L6- 30R
Others	IEC 60309 with 4.3 m power cord	IEC 60309

If this is not compatible with your power receptacle, it is your responsibility to connect the ICP-MS power cord safely. This can be done via an industrial standard locking plug and socket, or directly into a switched distribution panel.
For more information, refer to "Detailed Power Consumption and Configuration" on page 23.

Cooling Water Requirements

Special Notes

1. The preferred cooling system is the Agilent Chiller (G3292A), or Heat Exchanger (G1879B), filled with Poly-Clear Fluid (G3292- 80010).
2. If you are not using the preferred system, and another type of water re-circulator is used, the reservoir should be filled with distilled water having a conductance in the range of 50 to 150 µs.
3. Distilled water will keep the system clean. Do not use tap water as it will contaminate the system and do not use deionized water as it will corrode the system.

Table 8 Cooling Water Requirements

Cooling Water Parameter	Specification
Heat to be absorbed	1,600W approximately
Flow Rate	> 5L/min (1.32 us gallons/min) Inlet pressure 230-400kPa (33-58psi)
Temperature	15-40°C at water inlet of ICP-MS
Conductivity *	50-150µS/cm at the chiller reservoir
Connections	Hose 1 × 10m long, ID=12mm (7/16inch) Male PT 1/2inch fittings on the 7800/7900 ICP-MS end
Water Filter	<100 microns particle size

* When not using the Chiller or Heat Exchanger in conjunction with Poly-Clear Fluid.

CAUTION

Continued operation with inadequate cooling can cause automatic shutdown of the ICP-MS and risk potential degradation in the performance of your instrument.

Using tap water can cause contamination to the drinking water line from ICP-MS.

The temperature of water exiting the system should be maintained at less than 40°C.

The outlet water line must be open to atmosphere to minimize flow variations.

For more information, refer to "Detailed Cooling Water Requirements and Operating Supplies" on page 28.

Gas Requirements

Special Notes

1 The Argon gas regulators should be within 5 meters of the ICP-MS. It is strongly recommended that the cell gas cylinder, regulator with pressure gauge and shutoff valve are within 3 m of the ICP-MS.

Argon Gas

Table 9 Argon Gas Requirements

Compressed gas	Purity	Typical Working Pressure kPa (psi)	Consumption (L/min)
Argon	≥99.99%	500-700 (73-102)	20
Option Gas (If required for application)	Oxygen 20% Argon 80% ≥99.999%	10-100 (1.5-14)	1.0

Cell Gas

Table 10 Cell Gas Requirements

Compressed gas	Purity	Typical Working Pressure kPa (psi)	Max Consumption (mL/min)
Helium	≥99.999%	90-130 (13-18.8)	12
Hydrogen *1	≥99.999%	20-60 (2.9-8.7)	10
Xenon *2	≥99.999%	20-60 (2.9-8.7)	1
NH_3/He 10%/90% *2	≥99.999% *3	20-60 (2.9-8.7)	10

*1: Hydrogen gas is an option with the ICP-MS.
*2: 3rd Cell Gas Line is an option.
*3: Both the NH3 and He gases used to prepare the gas mix must be 99.999% pure. For NH3/He Gas, Agilent recommends use of CONCOA Regulators and Protocol Station. To find a Concoa representative in your area please visit Concoa on the web at http://www.concoa.com.

NOTE Regulator Connection Standards vary by country and region.

Essential Requirements for Cell Gas Installation

Special Notes

1. The cell gas pathway from the source to the mass spectrometer must be as short and as clean as possible to ensure correct operation of the ORS.
2. Only dedicated cylinders of 99.999% pure gas are to be used.
3. House gas supplies are not allowed, and sharing of gas supplies with other instruments (except another Agilent ORS (single quad or triple quad) ICP-MS) is not allowed.
4. The Agilent ancillary parts detailed below should be used to ensure the highest quality supply of He and H_2 cell gas.
5. Only the Agilent stainless steel tubing (Part Number G3270- 65035 should be used to connect the He, H2, (or other cell gases) cell gas cylinders to the Agilent ICP-MS, and the length of the tubing must be less than 3m.
6. No other valves, fittings or connections are to be inserted along the length of the cell gas supply lines.

NOTE on use of Hydrogen Generator: Use of a H_2 generator for cell gas supplies is not recommended. If a H_2 generator is used it must be fitted with an effective moisture trap and it must be correctly operated and maintained to ensure that the gas supply reaching the ICP-MS is completely free of moisture and contaminants. Failure to ensure that cell gases are clean and dry will compromise performance and increase maintenance, and may cause damage to the instrument.

Agilent Part Number	Description
CP17976 *1	Filter x 2, single position base plate (for He and/or H2)
CP7988	Single-position base plate
CP7981	Wall mount bracket
8710-1709	Tube cutter
G3270-65035	1/8" Stainless steel tubing, 6 m

*1: Do not use for NH3/He

7. Consult your local supplier for regulators detailed below.

Description	Quantity	Note
Two stage regulator, must be fitted with stainless steel diaphragms, 100 - 200kPa (14 - 28 psi) **For use with: He**	1	These regulators must be ordered in the country of use. Gas cylinder - regulator connections vary throughout the world and are not compatible.
Two stage regulator, must be fitted with stainless steel diaphragms, 100 - 200kPa (14 - 28 psi) **For use with: H2**	1	

For more information, refer to "Detailed Gas Requirements" on page 29.

Communications

Special Notes

1. A network connection to the company LAN is not required for instrument operation. If you need to connect the ICP-MS computer to your company LAN, we only recommend connection via a switching HUB. A small 10/100 6 port switch can be obtained from many sources at low cost.
2. When connecting via a switching hub, your IT department must reserve two fixed (static) IP addresses that share the same subnet mask and are dedicated to the ICP-MS.
3. The Agilent ICP-MS system does not support the use of a computer with two network interface cards. It has been observed that the use of two network cards frequently results in crosstalk between the cards. This crosstalk can cause communication failures.

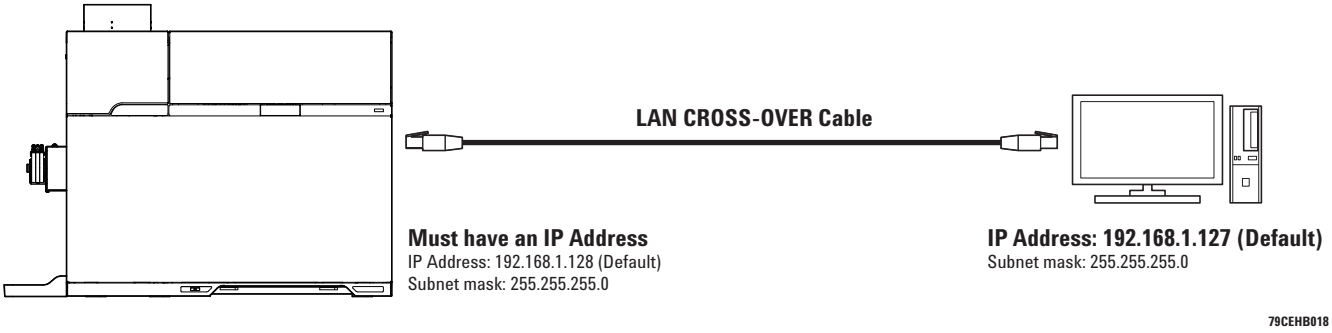

Figure 6 Basic Connection

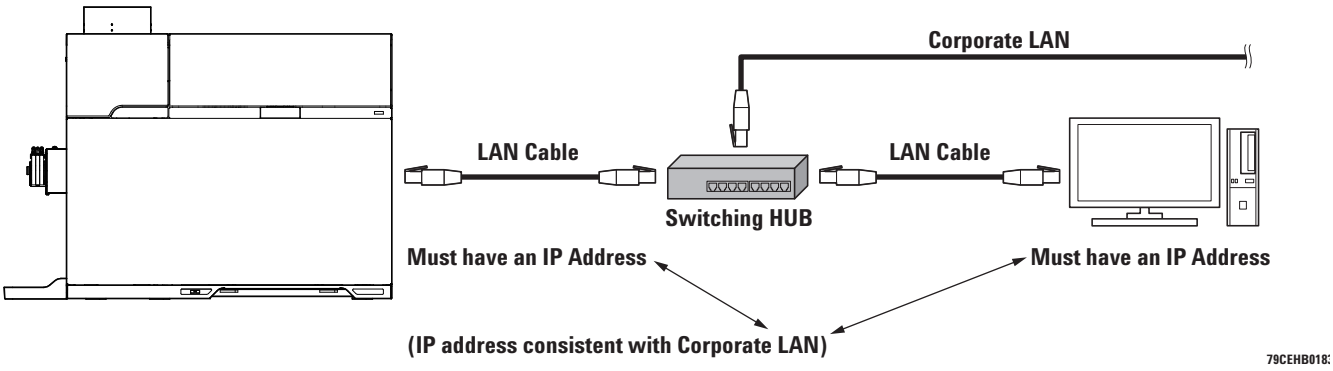

Figure 7 Connection via a Switching HUB

Laboratory Supply Requirements

Special Notes

1 The following items are commonly used with the ICP-MS system. Refer to Table 11 below, and make sure you obtain the necessary supplies.

- A set of clean hand tools dedicated for maintenance of ultra- clean parts such as the ion lens, interface, etc.
- Reagent- grade acetone, methanol, or isopropanol for cleaning. Proper storage, handling, and disposal of these chemicals is required for personal and environmental safety.
- Laboratory glassware detergent and deionized water for general cleaning of system components.

WARNING **Chemical solvents should be considered hazardous and must be handled with care. Contact your chemical supplier for additional solvent handling and safety information.**

An auxiliary work space and fume hood are needed for maintenance procedures such as interface, ion lens, etc. cleaning.

Table 11 Recommended Tools, Equipment and Supplies

Item	Description
Ball Driver	Metric, Hex set
Beakers	50mL, 250mL, 600mL
Sample Bottles	Polypropylene
Cloths	Clean Lint Free
Cotton Applicators	
Gloves	Lint Free
Gloves	Chemical Resistant
Magnifier	for Inspection of Interface Cones
Ultrasonic Bath	at least 1 Quart Capacity
Pliers	Needle Nose
Screwdrivers	Torx, Phillips & Flat head
Wrenches	Various Metric
Volt/Ohm Meter	High Impedance > 10M ohm

Other Requirements

Special Notes

1 Customer must create Microsoft Account when the Excel 2013 package arrives.

2 If necessary, insert tie down brackets into mounting holes, create corresponding holes in the table, and secure the brackets with bolts.

NOTE Seismic brackets are not supplied by Agilent. Prepare these items separately.

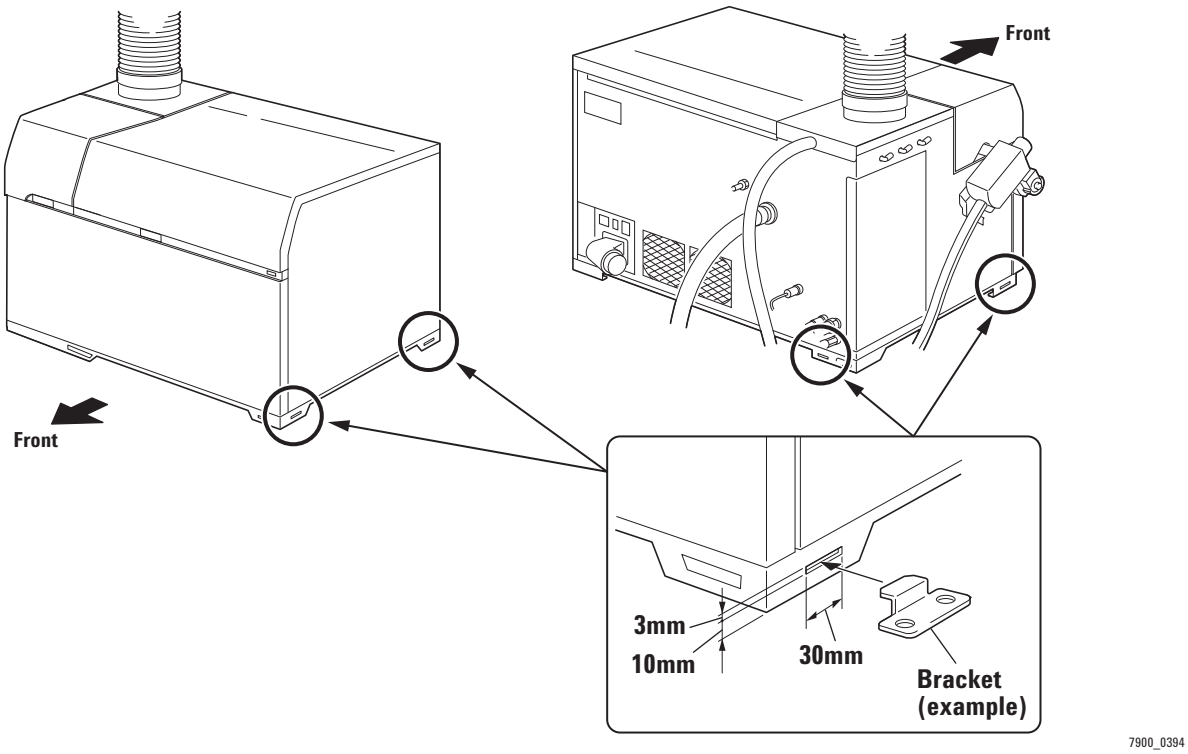

Figure 8 Holes for Seismic Tie Down

Important Customer Web Links

- For additional information about our solutions, please visit our web site at http://www.chem.agilent.com/en-US/Pages/HomePage.aspx
- Need to get information on your product?
  Literature Library - http://www.agilent.com/chem/library
- Need to know more?
  Customer Education – http://www.agilent.com/chem/education
- Need technical support, FAQs? – http://www.agilent.com/chem/techsupp
- Need supplies? – http://www.agilent.com/chem/supplies

Appendix

Detailed Environmental Conditions and Site Requirements

Environment conditioning considerations include temperature, humidity, altitude, atmosphere, airborne dust and exhaust venting.

Temperature and Humidity

Be sure to add the additional heat output of other optional equipment and system peripherals installed in the lab.
Agilent Technologies recommends you set up the water recirculator outside the laboratory; if possible in a well ventilated room. Additional allowances should be made for other heat sources, such as heat from adjacent rooms.

Example: Air Conditioning Requirements:

Case 1: Heat Exchanger in Lab.
Heat Dissipated to the room is
1 - 6 - 8 + 2 + 3 + 4
2,900 - 1,600 - 1,600 + 500 + 430 + 2,000 = 2,630 Watts

Case 2: Heat Exchanger external to Lab.
Heat Dissipated to the room is
1 - 6 - 8 + 2 + 3
2,900 - 1,600 - 1,600 + 500 + 430 = 630 Watts

Case 3: Chiller in Lab.
Heat Dissipated to the room is
1 - 7 - 8 + 2 + 3 + 5
2,900 - 1,600 - 1,600 + 500 + 430 + 3,200 = 3,830 Watts

Case 4: Chiller external to Lab.
Heat Dissipated to the room is
1 - 7 - 8 + 2 + 3
2,900 - 1,600 - 1,600 + 500 + 430 = 630 Watts

Exhaust Venting

The ICP-MS can produce ozone and high temperatures. A ventilation duct must be connected to the exhaust port of the instrument during operation for removal of waste products.

NOTE Exhaust gas venting must comply with all local environmental codes.

NOTE Agilent Technologies engineer will not install your ICP-MS system until an adequate exhaust system is present and functioning.

Your exhaust system must have the capacity to maintain negative pressure with $6m^3/min = 5.7m/sec$ of gas flow. Inadequate exhaust capacity can degrade the performance of your ICP-MS or cause system failures.

Refer to the following example for calculating the exhaust flow in m^3/min from the flow meter reading (m/min).

<Example>

meter reading$\times 3.142r^2$

$= \text{meter reading} \times 3.142 \times (75 \times 10^{-3})^2$

$= 1.76 \times 10^{-2} \times \text{meter reading}$

Note: r = Duct radius

πr^2 = Area of Duct

$\pi = 3.142$

Safety information for installation

Installation category based on IEC61010:II

The “Installation category” implies the regulation for impulse withstand voltage. It is also called the “Over voltage category”. “II” applies to electrical equipment.

Pollution level based on IEC61010:2

“Pollution level” describes the degree to which a solid, liquid or gas which deteriorates dielectric strength is adhering. “2” applies to a normal indoor atmosphere.

Electrical Power (Voltage, Frequency, Amperage, Phase)

200-240VAC, 50/60Hz, 30A, single phase
Supply voltage fluctuations are not exceed 10% of the nominal supply voltage.

Detailed Power Consumption and Configuration

General Power Configuration

Power for the ICP-MS is supplied in single-phase, Split phase, 3 phase star 4 wired, High-leg delta or 208 Wye configuration (see Table 12).
Correct grounding for the 208 Wye configuration must be verified by an electrician. The neutral wire cannot be used for safety grounding. The ground wire (green or green/yellow) should carry zero current except for ground-fault current or static electric discharge. The entire system should share an isolated, noise-free electrical ground.

Table 12 Electrical Configurations

Configuration	Measurement	Nominal voltage
Single phase	Line(L) to Neutral Line(L) to Ground Ground to Neutral	220Vac 220Vac <0.5Vrms
Split phase	Line(L1) to Line(L2) Line(L1) to Ground Line(L2) to Ground	240Vac 120Vac 120Vac
3 phase star 4 wired	Line to Neutral (Phase A to Neutral) Line to Ground (Phase A to Ground) Ground to Neutral	240Vac 240Vac <0.5Vrms
High-leg Delta (3 phase delta)	Line to Neutral (Phase B to Neutral) Line to Ground Ground to Neutral (Phase B to Ground)	207Vac 207Vac <0.5Vrms
208 Wye	Line to Line (Phase A to Phase B) Line to Ground (Phase A to Ground)	208Vac 120Vac

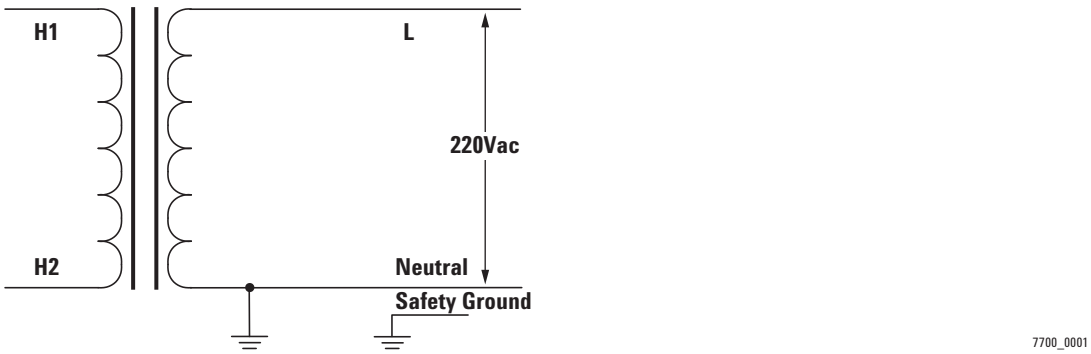

Figure 9 Single Phase Configuration

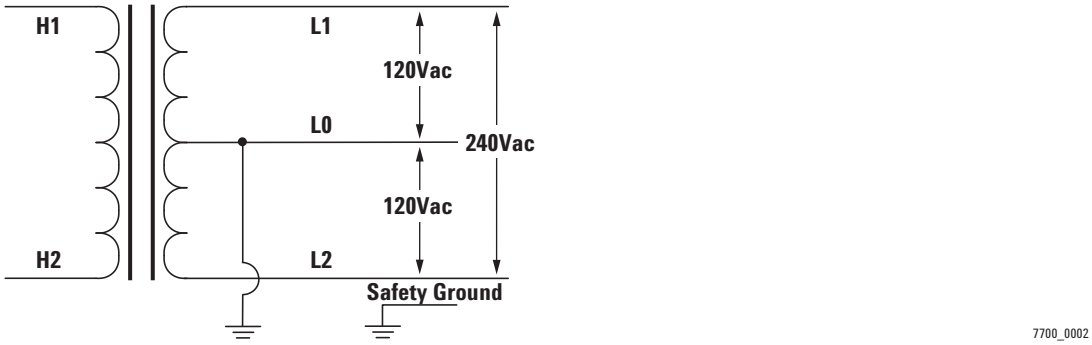

Figure 10 Split Phase Configuration

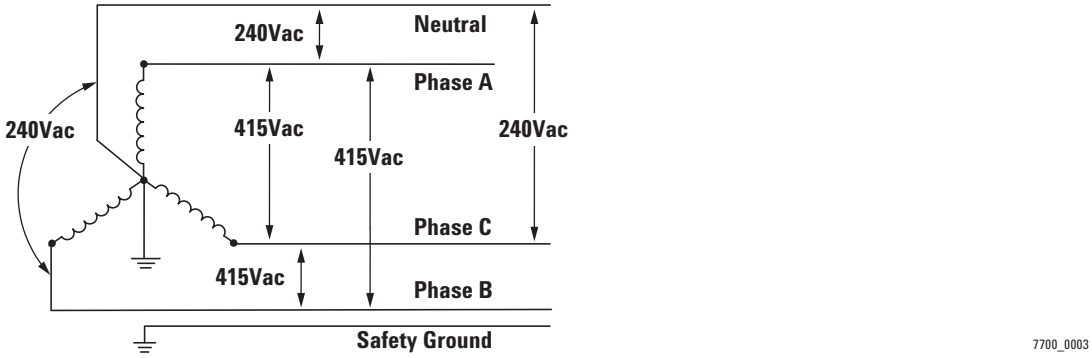

Figure 11 3 Phase Star 4 Wired Configuration

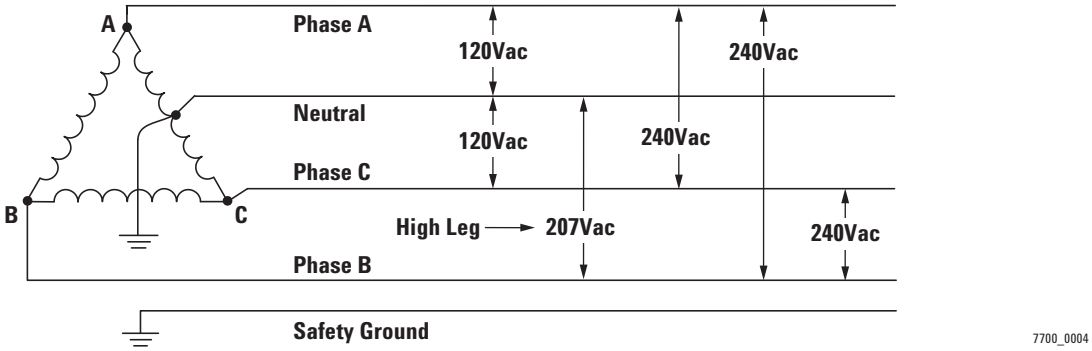

Figure 12 High-Leg Delta Configuration

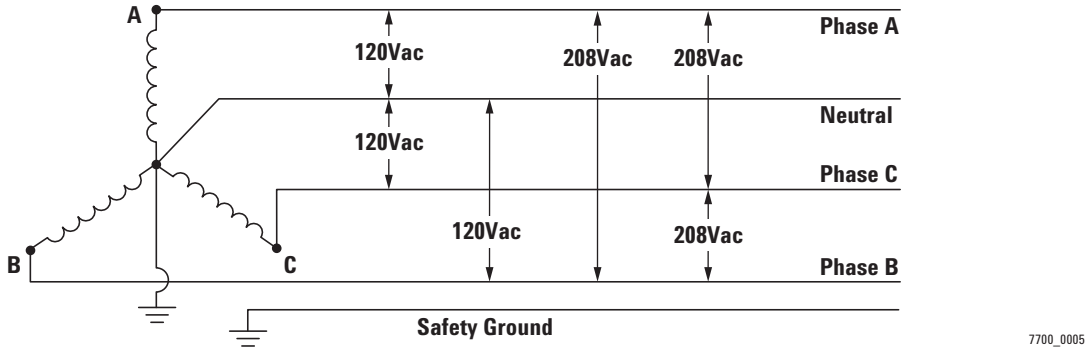

Figure 13 208 Wye Configuration

Power Plugs and Cords

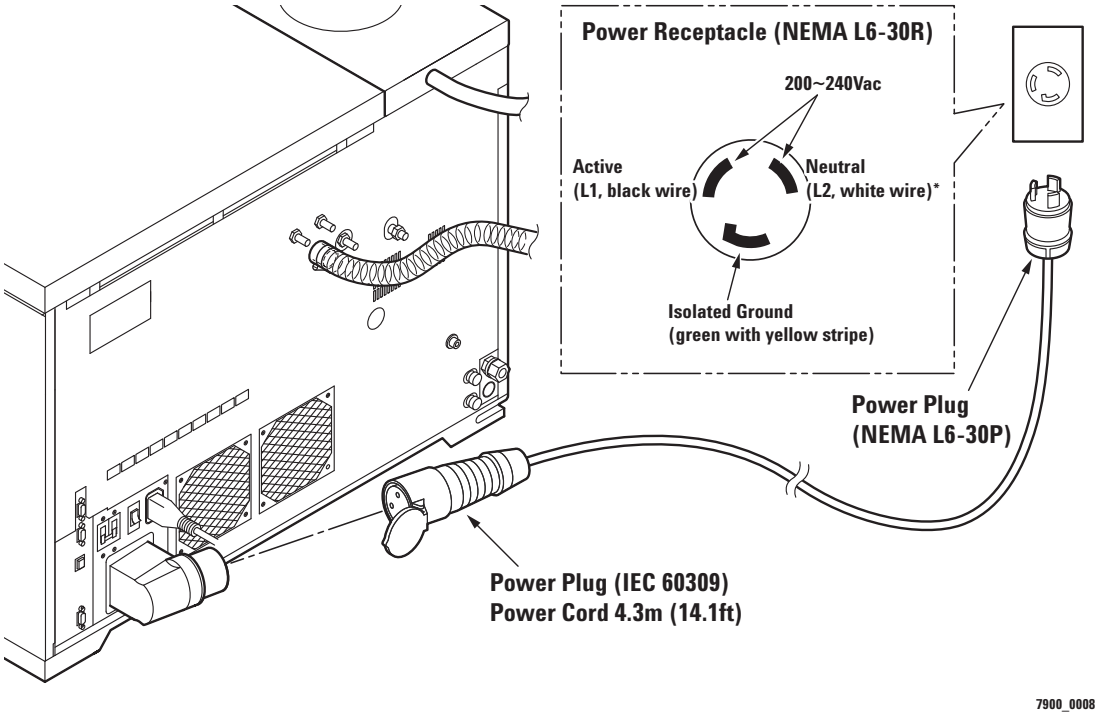

Figure 14 Power Receptacle for 200-219Vac, 50/60Hz (NEMA L6-30R)

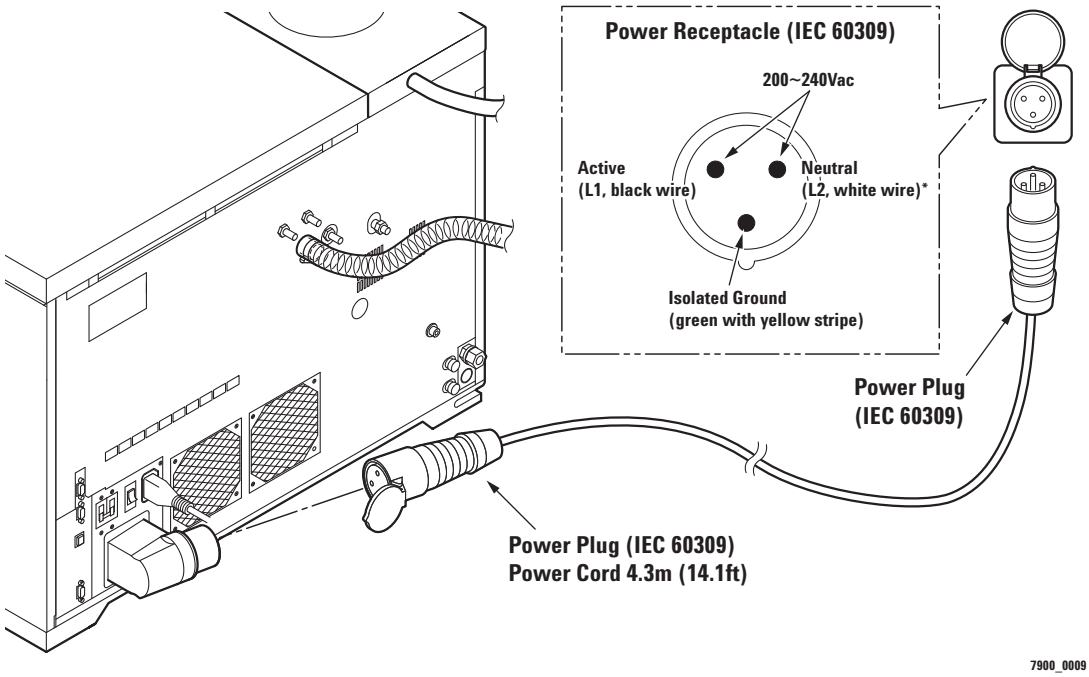

Figure 15 Power Receptacle for 200-240Vac, 50/60Hz (IEC 60309)

Power Conditioner/Uninterruptible Power Supply (UPS)

If the power supplied is outside the limits specified, a power conditioner may be required. Power conditioners aid in filtering impulses caused by lightning strikes, line spikes, oscillatory transients and electrical noise impulses.

It is the customer's responsibility to install the power conditioner and supply any additional equipment, circuit breakers, switches, etc., before the Agilent Technologies engineer arrives on site.

It is your responsibility to comply with all local and national electrical and safety codes. Check with your electrical department!

Data system components and accessories have power cords with plugs depending on the voltage and power cord option ordered. Power cord lengths for the data system components and accessories are 2.5m.

NOTE The ICP-MS has a start up rush current of 150A for 15 milliseconds.

General Power Requirements

Table 6 lists the power requirements for the ICP-MS and associated equipment. Extra power capacity for the future growth of your laboratory should be considered now. Power requirements and considerations include the following.

Each product listed in Table 6 requires a dedicated circuit. The ICP-MS mainframe, PC/PC monitor, water recirculator, etc. should each have a separate circuit breaker.

Power must meet the stability and transient specifications listed in Table 6. We recommend your site power specialist use a line monitor to check power stability. If your line power is unstable, you may need to install a line conditioner.

Separate convenience outlets should be provided for building maintenance and other appliances. Convenience outlets must be on circuits separate from the ICP-MS system and must share the normal building distribution ground, not the ICP-MS system ground.

In some geographical areas it may be advisable to install lightning protection for personnel and equipment.

Electromagnetic interference (EMI) generated by NMRs, radio transmitters, and microwave links, may interfere with system performance. Protect the system from static electricity by observing humidity and temperature requirements. Minimize the presence of non-conductive products such as carpets and vinyl floor tiles.

Emergency-off push buttons that will disconnect power to the ventilation system and all electric equipment in the room except overhead lighting are recommended.

A minimum of 4 power receptacles are required for data system installation; 6 power receptacles are recommended. Surge protection on the data system circuit is also recommended.

CAUTION There is a power receptacle on the rear of the ICP-MS, it is dedicated for the Foreline Pump. **DO NOT USE FOR ANY OTHER AUXILIARY EQUIPMENT.**

NOTE

1 Verify that the voltage available on site is adequate for all the equipment ordered.

2 Approximate values. Refer to the specific product specification. Data systems typically require at least 4 outlets and a 15A circuit with surge suppression.

Detailed Cooling Water Requirements and Operating Supplies

Water Quality

In the event that the chiller or heat exchanger with Poly-Clear Fluid is not used, and another type of water re-circulator is used, the reservoir should be filled with distilled water having a conductance in the range of 50-150 µs. Distilled water will keep the system clean. When the Chiller or heat exchanger in combination with Poly-Clear Fluid is not being used, refer to Table 13 for the water quality standards and recommendations.

Table 13 Water Quality Standards and Recommendations

	Permissible (ppm)	Desirable (ppm)
Inorganic Chemicals		
Calcium	<40	0.6
Chloride	250	<25
Copper	1.3	1.0
Iron	0.3	<0.1
Lead	0.015	0
Magnesium	<12	0.1
Manganese	0.05	<0.03
Nitrates/Nitrites	10 as N	0
Potassium	<20	0.3
Silicate	25	<0.1
Sodium	<20	0.3
Sulfate	250	<50
Hardness	17	<0.05
Total Dissolved Solid	50	10
Other Parameters		
pH	6.5-8.5	7-8
Conductivity	50-150 *	50 *

* µS/cm (Compensated at 25°C)

Unfavorably high total ionized solids (TIS) can accelerate the rate of galvanic corrosion. These contaminants can function as electrolytes which increase the potential for galvanic cell corrosion and lead to localized corrosion such as pitting which can be observed at the studs and on the outside surface of cooling coils of the chiller. Eventually, the pitting will become so extensive that the coil will leak refrigerant into the water reservoir.

As an example, raw water in the United States averages 171ppm (of NaCl). The recommended level for use in a water system is between 0.5 to 5.0ppm (of NaCl).

NOTE Initially fill the tank with distilled water. Do not use tap water as the total ionized solids level may be too high.

Do not use deionized water as it will corrode the system.

Detailed Gas Requirements

The Argon gas needed for installation will be supplied by the customer.

It is recommended that there be a shutoff valve and a regulator with a pressure gauge as shown in Figure 16, within 5m of the ICP-MS.

The customer will supply and prepare any gas piping from a remote gas storage area. This must be at least 1/4 inch in diameter and should be made of stainless steel.

Gas cylinders or liquid Argon may be used. Typically a cylinder of Argon lasts 8 hours. A 260L tank of liquid Argon lasts for approximately one month of daily (8 hours) operation.

WARNING **Strictly adhere to all local and national regulations and guidelines for the proper storage, handling and transport of all gases.**
Compressed gas tanks must be handled with care. The contents of the cylinders also may be hazardous, depending on the gases you choose to use. Contact your gas supplier for cylinder handling, storage, transport and safety information for the gases that you will be using.

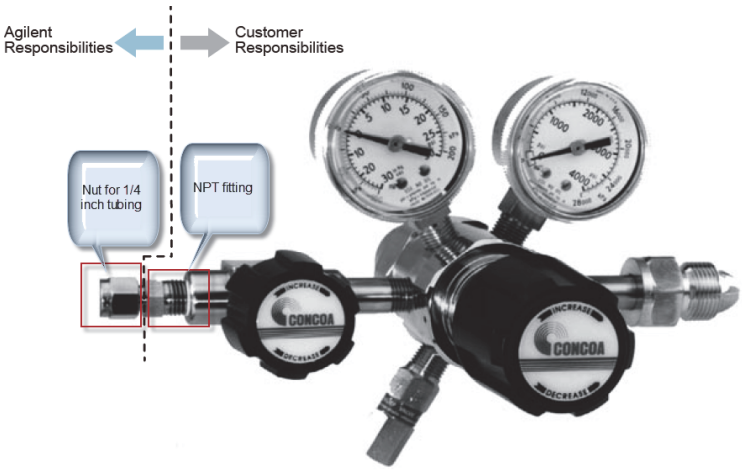

Figure 16 NPT Fitting and 1/4 Inch Nut Connectors at the Pressure Regulator

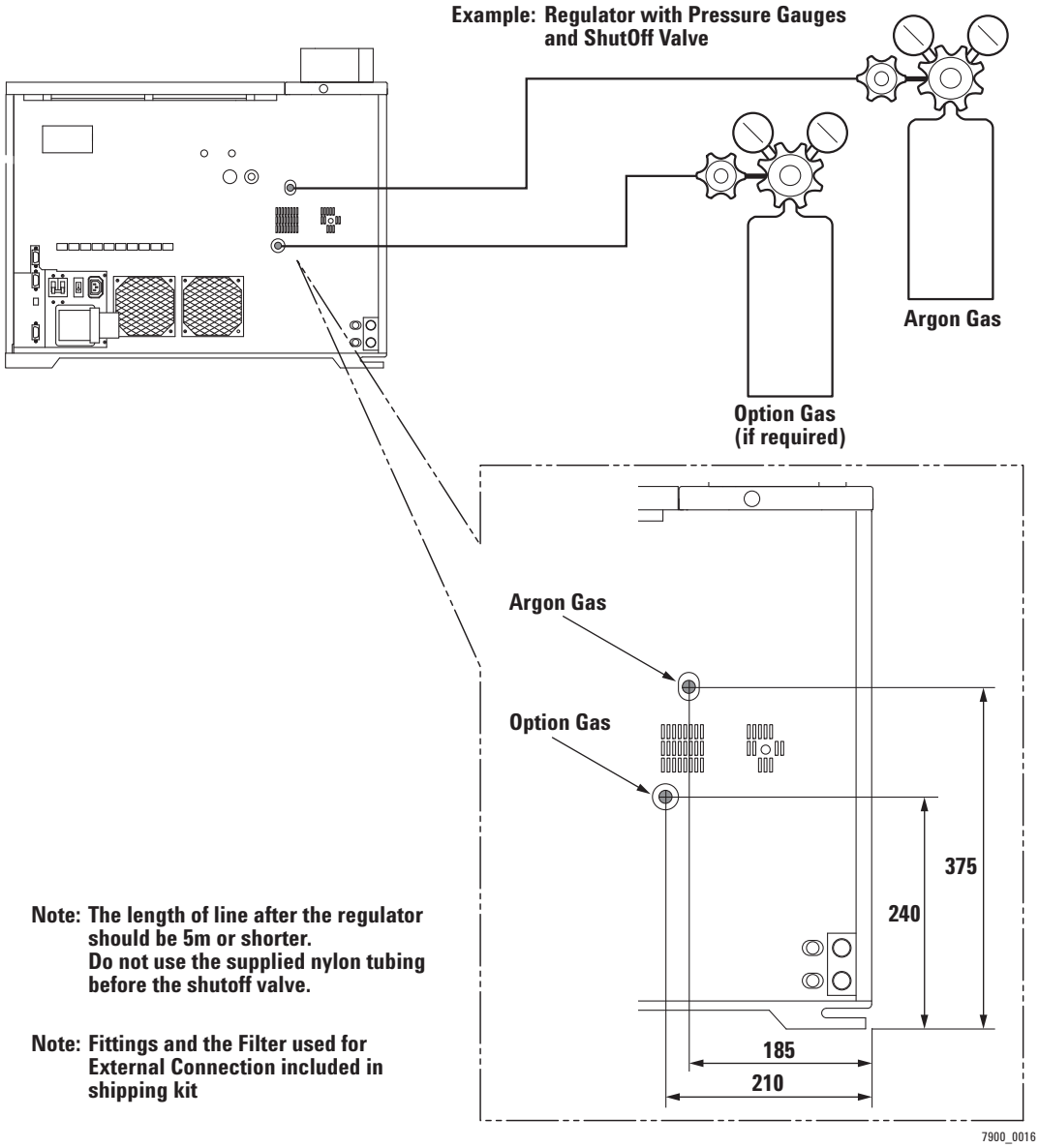

Figure 17 Example Gas Connection and Connection Location (all units in mm)

Argon Gas Purity

Contamination of instrumentation and poor ignition of plasma can be caused by low grade Argon, an acceptable specification for Argon purity is listed in Table 14.

Table 14 Argon Purity

Contamination		Level
O_2	Oxygen	<2ppm
N_2	Nitrogen	<10ppm
CO	Carbon Oxide	<0.5ppm
CO_2	Carbon Dioxide	<0.5ppm
CH_4	Methane	<0.5ppm
H_2O	Water	<5ppm

Requirements for Argon Gas Supply Installation

Agilent Technologies will provide nylon tubing, 1/4 inch (6.4mm) O.D., 5m long. This is used for supplying gases to the ICP-MS from the laboratory shutoff valve.

NOTE The length of line after the regulator should be within 5m.
Do not use the supplied nylon tubing before the shutoff valve.

NOTE Fittings and the filter used for external connection included in shipping kit.

Customers will provide connection from the gas supply to a shutoff valve. This tubing should be 1/4 inch (6.4mm) Electro Polished stainless steel or stainless steel that has been cleaned.

The customer should provide the pressure regulator for the Argon gas cylinder. All pressure regulators should be stainless steel two-stage for ultra high purity;

Input: 0-24×10^6Pa (0-3500psig)
Output: 0-9.8×10^5Pa (0-150psig)

When ordering, consider the size of the output tubing, 1/4 inch (6.4mm), and also the Compressed Gas Association (CGA) number.

Your gas supplier can advise, supply and install all items for a successful installation.

NOTE Please ensure that the type of connector used at the outlet side of the gas-pressure regulator conforms to applicable national requirements.

WARNING **Compressed gas tanks must be handled with care. The contents of the cylinders also may be hazardous depending on the gases you choose to use. Please contact your gas supplier for cylinder handling and safety information for the gases that you will be using.**

Cell Gas Requirement

It is strongly recommended that the cell gas cylinder, regulator with pressure gauge and shutoff valve are within 3m of the ICP-MS.

The ICP-MS will be shipped with 1/8 inch Swagelok® fitting for Helium (optoins #110 and #111 will be shipped with 1/8 inch Swagelok® fittings for Helium and Hydrogen cell gas connections) on the rear of the instrument.

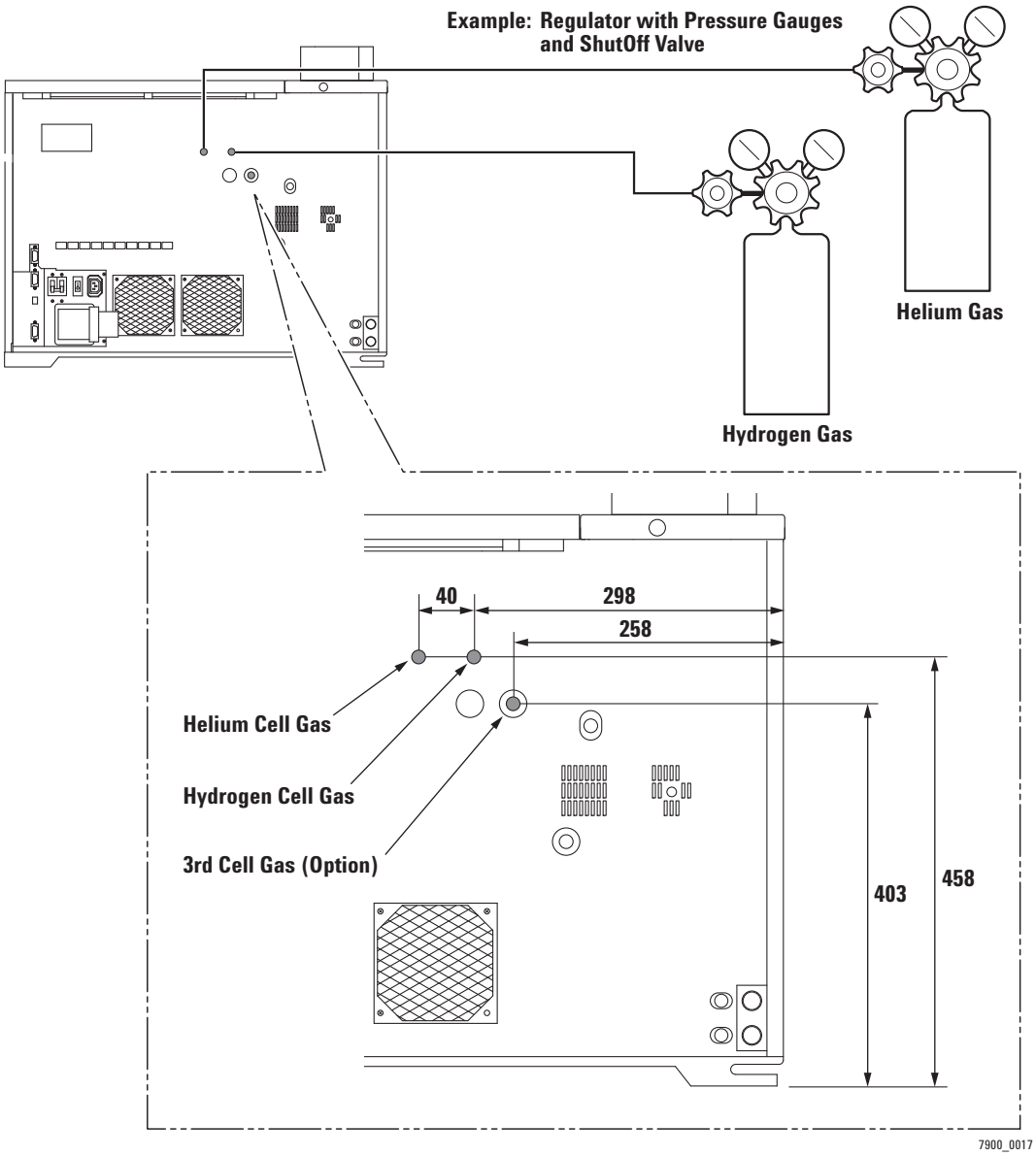

Figure 18 Example of Cell Gas Connection and Connection Location (all units in mm)

Gas Purity Problem

Atmospheric Oxygen, moisture and volatile organics entering the cell gas lines will result in poor/unpredictable ORS interference removal, and severe signal drift or changes in sensitivity due to contamination of the octopole (which will then have to be replaced).

The common causes are:

- Use of existing He and H_2 lab supplies, instead of using dedicated cylinders for the ICP-MS
- Dirty, or previously used piping to connect the cylinder to the ICP-MS (or use of Cu instead of stainless steel)
- Use of gas cylinder regulators with plastic diaphragms (use only stainless steel diaphragm regulators designed for use with high purity gas supplies)
- Use of a Hydrogen generator (we don't recommend the use of these as the moisture content of the H_2 is too high)
- Use of cell gas of less than 99.999% quality
- Sharing of cell gas lines with other instrumentation

The fitting of a gas purifier offers further protection for the ORS - for example if a cylinder of contaminated gas is connected, the gas purifier assures peak performance (spectral interference removal) of the ORS cell.

Follow the instructions below to ensure your system is operating at peak performance.

Essential Requirements for Cell Gas Supply Installation

NOTE The following regulators are available for North America.

0101-1398 Regulator for Helium Cell Gas
0101-1399 Regulator for Hydrogen Cell Gas
5188-5374 Regulator for Ammonia Cell Gas
0101-1400 Regulator for Argon Gas

Customers will supply all gases that are needed for installation.

Customers will provide connection from the gas supply to the instrument. This tubing should be 1/8 inch (3.2mm) Electro Polished stainless steel or Bright Anneal stainless steel or stainless steel that has been cleaned.

The ICP-MS requires high purity cell gases for best performance. Stainless Steel Tubing (Part# G3270-65035) must be used for the cell gas lines; other materials (such as copper) are not satisfactory. Agilent does not guarantee the ICP-MS performance when using alternative materials for the cell gas line tubing.

The customer must supply pressure regulators for the cell gas cylinders. Stainless steel two stage regulators are recommended for ultra high purity, corrosive or toxic gas applications;

Input: 0-14×10^6Pa (0-2000psig)
Output: 0-1.0×10^5Pa (0-15psig), or 0-2.0×10^5Pa (0-30psig)

When ordering, consider the size of the output tubing, 1/8 inch (3.2mm), and also the Compressed Gas Association (CGA) number.

NOTE Please ensure that the type of connector used at the outlet side of the gas-pressure regulator conforms to applicable national requirements.

www.agilent.com

In this Book

This manual will help you prepare your facility for the arrival of your new Agilent 7800/7900 Inductively Coupled Plasma Mass Spectrometer (ICP-MS). The specifications in this manual ensure consistent, reliable and safe installation of your ICP-MS system.

© Agilent Technologies, Inc. 2015

Rev. B, June 2015

G8400-90020

Agilent Technologies